

Installation guide

Natura – Hemp Straw Tile

DESIGNER CEILING

Natura – Hemp Straw Tile

nOWAcoustic

NATURAL.
RENEWABLE.
NATURA.

Natura stands out thanks to the use of hemp straw as a renewable raw material and a carbon footprint of –1.34 kg CO_2 eq. per m^2 in modules A1–A3, as well as its versatile applications. Natura is vapour-permeable and promotes a comfortable indoor climate. Natura is ideal for creating unique interior design concepts and ensures a pleasant contemporary environment.









Contents

1. REQUIRED INSTALLATION TOOLS 6

2. GENERAL INFORMATION 6

3. REQUIREMENTS FOR INSTALLATION 7

4. CUTTING NATURA HEMP STRAW TILES 7

5. SUB-CONSTRUCTION, NATURA TILE 8

- 5.1 Sub-construction CD profiles 8
- 5.2 Sub-construction with timber battens 8
- 5.3 Natura tile 9

6. ASSEMBLY OF THE SUB-CONSTRUCTION 10

- 6.1 Sub-construction CD profiles 10
  - 6.1.1 Top view 10
  - 6.1.2 Wall abutment 10
  - 6.1.3 Expansion gap 10
- 6.2 Substructure: Wooden battens 11
  - 6.2.1 Top view 11
  - 6.2.2 Wall abutment 11
  - 6.2.3 Expansion gap 11
- 6.3 Integration of recessed or surface-mounted lights, spotlights, ventilation components, and similar 12

7. FITTING THE NATURA TILES TO A CD STRUCTURE OR WOODEN BATTENS 13

- 7.1 Screws 13
  - 7.1.1 Tile fastening points when fitting to CD profiles or wooden battens . . . 14
  - 7.1.2 Material requirements per m^2 depending on format 14
- 7.2 Adhesive 15
  - 7.2.1 Bonding points for the tiles 16
  - 7.2.2 Material requirements per m^2 depending on the format 16

Required installation tools / General information

1. REQUIRED INSTALLATION TOOLS

- Cordless screwdriver (screws)
- Cartridge gun (adhesive)
- Pencil
- Ruler
- Circular saw, jigsaw, or hole saw
- Sheet metal snips

2. GENERAL INFORMATION

Natura hemp straw tiles are delivered ready for use. Open the packaging immediately upon receipt and check the material for any transport damage. Please report any abnormalities immediately. If the tiles are not to be installed immediately, they must be stored in their original packaging in a clean, dry, and climate-controlled environment. The elements should always be stored flat and level until installed. Handle the tiles carefully and gently. The wall and ceiling surfaces must be free of dust, dirt, and loose particles. Installation must not be carried out on damp or freshly painted surfaces.

These instructions serve solely as an overview of basic installation guidelines. The ceiling installer is solely responsible for proper execution, identifying potential defects, and checking the structural conditions. Substrates and structural requirements must be assessed on site and carried out in accordance with applicable standards and legal regulations. OWA accepts no liability for installation errors or the selection of unsuitable materials. Check the material immediately upon delivery and contact OWA without delay if you discover any damage, moisture, or other impairments.

Classification of fire behavior as a building product:
For the classification of reaction to fire according to EN 13501-1, the building product Natura was awarded the classification B-s1,d0 – flame retardant.

Labelling according to the Construction Products Regulation (EU-BauPV):
Natura has been tested and labelled in accordance with Construction Products Regulation No. 305/2011. The associated requirement to issue a Declaration of Performance (DoP) is therefore guaranteed for the hemp straw tiles. The DoP number can be found on the respective packaging.

Fixings:

Soffits and roofs:
Connecting and fastening elements for upper suspension: In order to create a force-fit connection between the soffit (roof) and the suspension system, only approved fasteners may be used. When anchoring in solid substrates, the relevant ETA (European Technical Approval) for the respective fasteners must generally be observed in accordance with EN 13964.

Steel and solid concrete ceilings:
The connection between the suspension system and the solid concrete soffit must be made with fasteners approved by the building authorities. The fixing manufacturer's instructions must be observed. The respective valid approvals or the building authority test reports for the fastening elements (pull-out tests, if applicable) must be taken into account.

Trapezoidal sheet metal roof:
If direct attachment of the ceiling hangers to the trapezoidal sheets is unavoidable, only the vertical webs of the trapezoidal sheets should be used for fastening. In any case, the hangers must be screwed in place. Approved sheet metal screws or, for example, rivet nut No. 97/30 with a self-locking screw No. 97/32 are suitable. No. 97/30 No. 97/32. The supporting structure of the suspended ceiling must be arranged perpendicular to the direction of the trapezoidal sheets in order to achieve an even load distribution.

Handling, transport, and storage of hemp straw tiles:
To protect the tiles, it is recommended that they are stored in their packaging until installation. Acoustic elements and accessories must be protected from moisture and stored in a frost-free location within the building. Improper storage and/or moisture absorption can cause the elements to warp, which could negatively affect the end result.
The materials must be allowed to acclimatise before processing.

Warranty
Failure to comply with the recommended installation instructions valid at the time of installation will void the warranty.

3. REQUIREMENTS FOR INSTALLATION

The following requirements must be observed before installing the Natura ceiling:
- The installation room must be weatherproof, waterproof, and clean (no outdoor use).
- During installation of the ceiling system, the relative humidity must be between 40% and 70%, and the temperature should be between 10 and 30°C, preferably 18°C.
- Temperature and humidity should be kept as constant as possible. Significant and/or rapid fluctuations can lead to undesirable changes in shape.
- System-compliant construction parts in accordance with EN 13964 and EN 14195 must be used.
- All tiles required for the complete installation must be available before work begins.
- Existing building expansion joints must be incorporated into the Natura ceiling.
- Any necessary fixtures must be installed before the Natura tiles are mounted. Coordination between the drywall, electrical, and other trades involved is essential.
- All fixtures must also be suspended from the ceiling soffit or sub-grid.

4. CUTTING NATURA HEMP STRAW TILES

Natura hemp straw tiles can be cut using a circular saw, jigsaw, and hole saw. A 50 ml repair kit is included for each colour to repair chipping or damage.

5. SUB-CONSTRUCTION, NATURA TILE

5.1 SUB-CONSTRUCTION CD PROFILES

Only the profile construction parts listed below or equivalent parts may be used. The specified center distances must be strictly adhered to. Deviations may negatively affect or alter the subsequent appearance of the Natura ceiling.

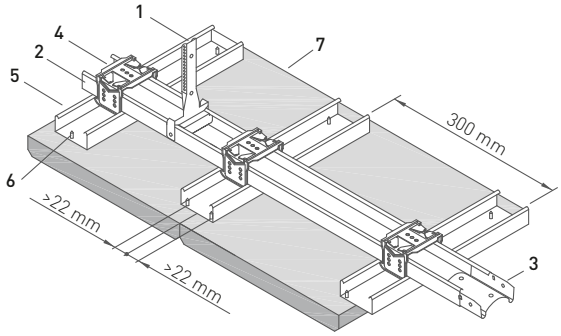

1 Nonius hanger for CD profile 60/27 according to EN 13964
2 Support grid CD profile 60/27 according to EN 14195
3 CD profile connector according to EN 13964
4 Cross connectors or equivalent according to EN 13964
5 Tile grid CD profile 60/27 according to EN 14195, spacing ⩽ 300 mm
6 Wood screws with partial thread 4.5 x 50 mm
7 Natura tile

5.2 SUB-CONSTRUCTION WITH TIMBER BATTENS

The specified center distances must be strictly adhered to. Deviations may negatively affect or alter the subsequent appearance of the Natura ceiling.

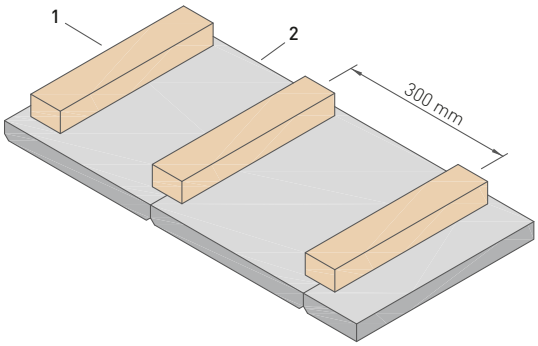

1 Timber batten 38 x 58 mm, spacing ⩽ 300 mm
2 Natura tile, fastened to the battens with 4.5 x 50 mm partially threaded wood screws

5.3 NATURA TILE

The tiles are fastened to CD profiles, timber battens, or directly to the substrate using wood screws or mounting adhesive. The tiles must be butted together tightly.

Technical specifications for nOWAcoustic Natura:

Tile dimensions	see below
Building material class	B2-s1,d0 according to EN 13501-1
Sound absorption	α_w = 0,70
Visible side of tile	coloured or natural (uncoated)
Edge	N8 (8 mm bevel) and N18 (18 mm bevel)
Weight	11 kg/m^2

Dimensions

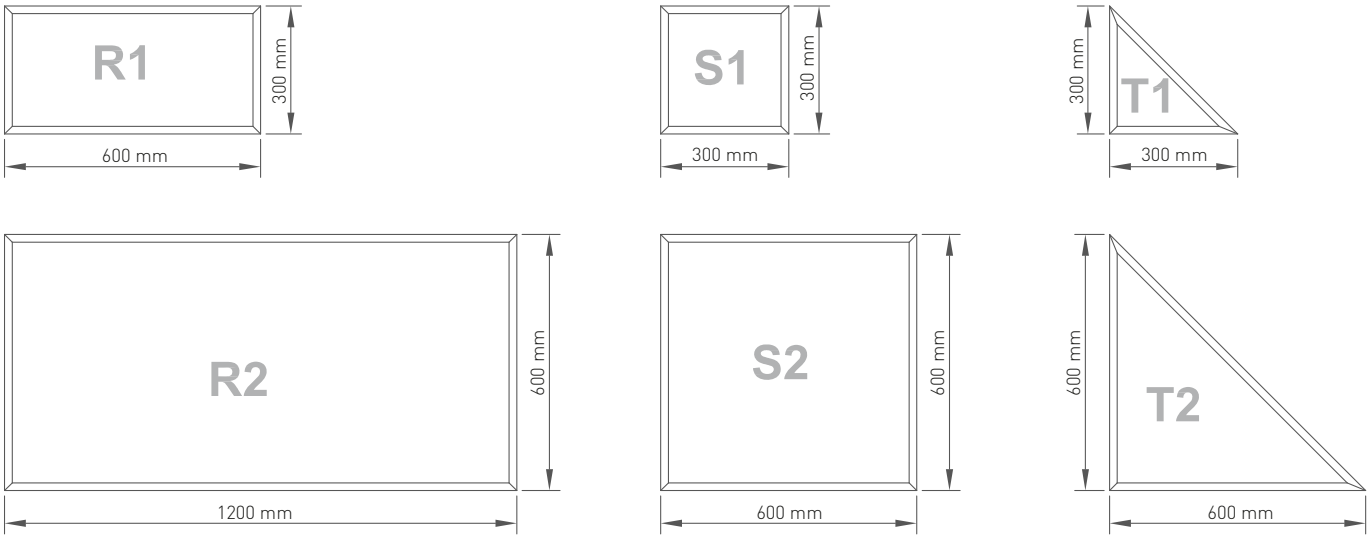

Please note: T1 and T2 formats are only available for direct mounting!

Edge N8

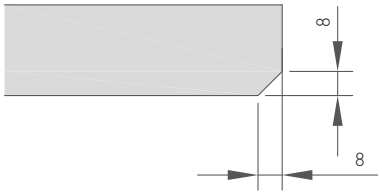

Edge N18

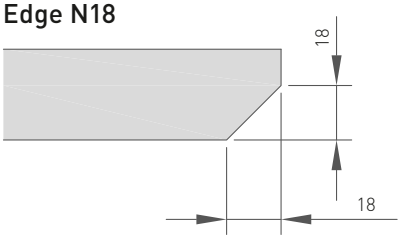

6. ASSEMBLY OF THE SUB-CONSTRUCTION

Installation and load transfer in accordance with the manufacturer's specifications for the sub-construction.

6.1 SUB-CONSTRUCTION CD PROFILES

Installation with CD profiles (in accordance with EN 14195) at a maximum center distance of 300 mm. Fastening to the support grid with cross connectors (in accordance with EN 13964) in accordance with the manufacturer's specifications. The CD profiles are connected to each other using longitudinal connectors (in accordance with EN 13964) in accordance with the manufacturer's specifications.

6.1.1 Top view

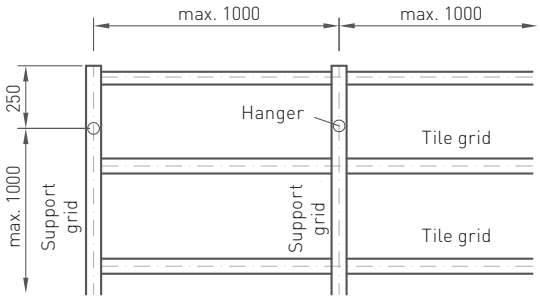

6.1.2 Wall abutment

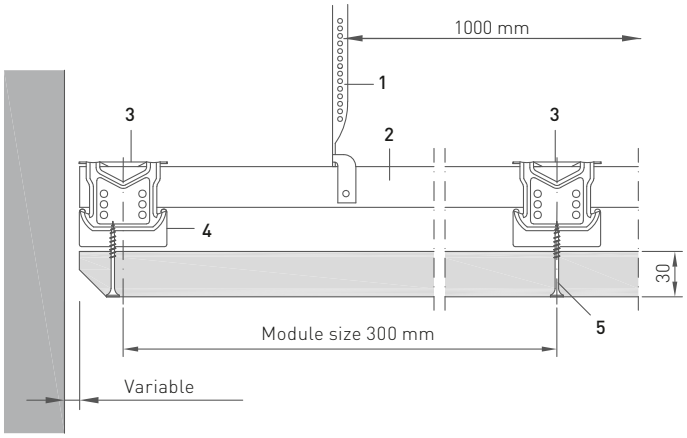

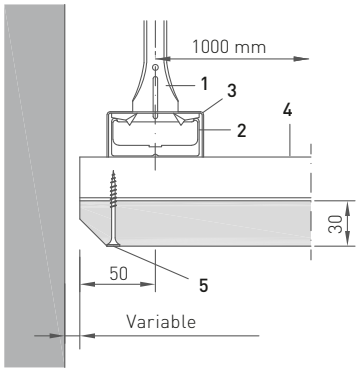

6.1.3 Expansion gap

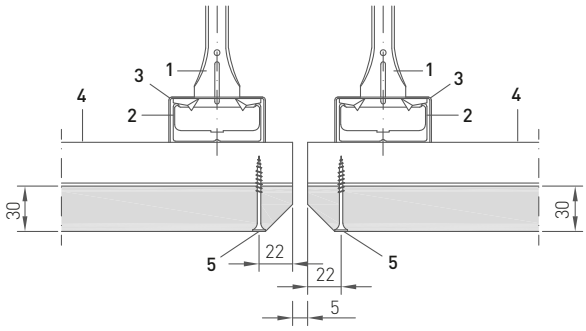

1 Nonius hanger for CD profile 60/27
2 CD support grid
3 Cross connector
4 CD tile grid
5 Wood screws with partial thread 4.5 x 50 mm

Assembly of the sub-construction

6.2 SUBSTRUCTURE: WOODEN BATTENS

Installation using wooden battens with a maximum centre-to-centre distance of 300 mm.

6.2.1 Top view

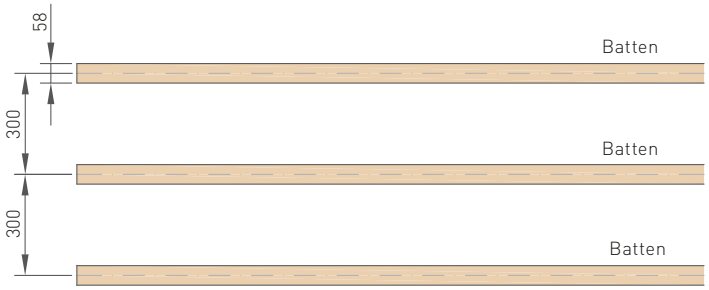

6.2.2 Wall abutment

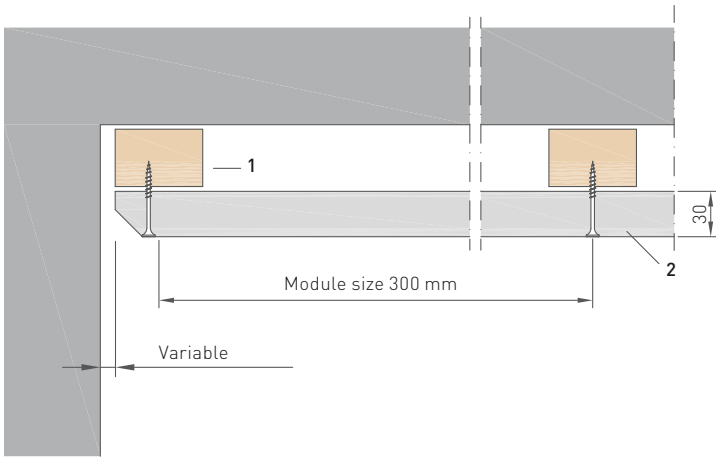

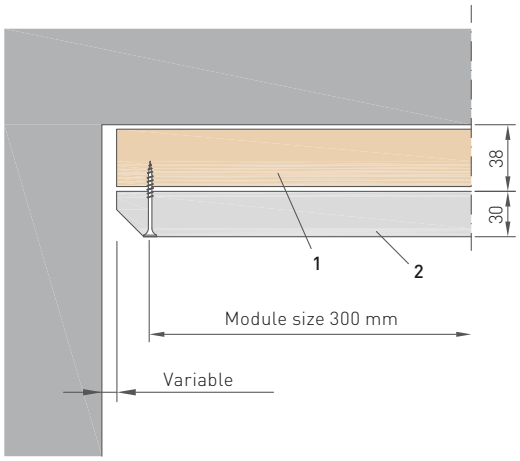

1 Wooden battens 38 x 58 mm, spacing ⩽ 300 mm
2 Natura tile, fixed with 4.5 x 50 mm partially threaded wood screws

6.2.3 Expansion gap

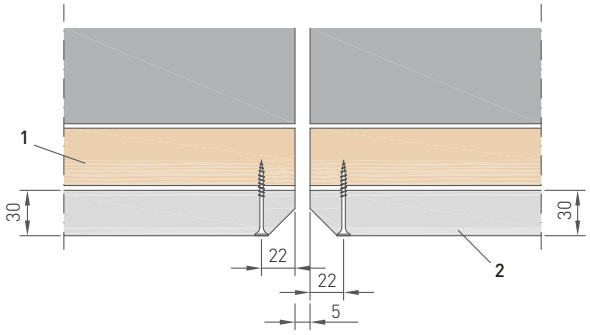

6.3 INTEGRATION OF RECESSED OR SURFACE-MOUNTED LIGHTS, SPOTLIGHTS, VENTILATION COMPONENTS, AND SIMILAR

In general, it is the task of the electrician or ventilation installer to carry out the installations after or during ceiling installation. Coordination between both trades is necessary in any case.

When installing lights and similar fixtures, it has proven advisable to have the ceiling installer take care of the installation of built-in and surface-mounted fixtures. These can be provided on site. The prerequisite is that the fixtures are recessed lights that are compatible with the ceiling system, e.g. OWAconstruct lights. The fixtures should then be connected by a qualified specialist. Items weighing ≤ 0.0025 kN (~ 0.250 kg) can be supported directly by Natura hemp straw tiles without any special measures.

Important basics:
No ELT cables may be attached to the ceiling suspension system. Likewise, cables of any kind should not be laid on the suspended ceiling. Individual cables used to connect lights or spotlights can be attached to the suspension system in consultation with the drywall installer. Relevant VDE regulations and, if applicable, fire protection requirements must be observed. The installation of built-in components must be commissioned by the client.

7. FITTING THE NATURA TILES TO A CD STRUCTURE OR WOODEN BATTENS

7.1 SCREWS

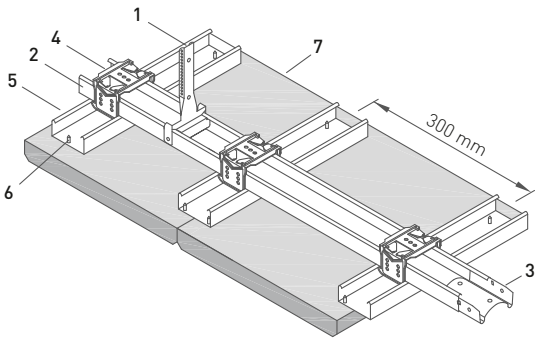

1 Nonius hanger for CD profile 60/27 according to EN 13964
2 Support grid CD profile 60/27 according to EN 14195
3 CD profile connector according to EN 13964
4 Cross connectors or equivalent according to EN 13964
5 Tile grid CD profile 60/27 according to EN 14195, spacing ⩽ 300 mm
6 Wood screws with partial thread 4.5 x 50 mm, fastening spacing ⩽ 300 mm
7 Natura tile

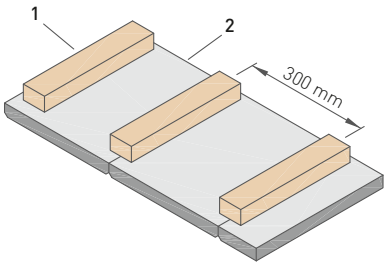

1 Wooden battens 38 x 58 mm, spacing ⩽ 300 mm
2 Natura tile with edge profiles N8 and N18, fixed to the battens using 4.5 x 50 mm partially threaded wood screws, with a fixing spacing of ⩽ 300 mm

The tiles are located directly onto the Wooden battens and screwed together to create a firm connection with the substructure. Wood screws, partially threaded 4.5 x 50 mm, must be screwed in at a center distance of 300 mm.

Guidelines drawn on the surface with pencil or similar are not permitted. These cannot be removed after completion. The use of a laser is recommended.

During installation, the tolerances in building construction must be observed.



Wood screws with partial thread 4.5 x 50 mm

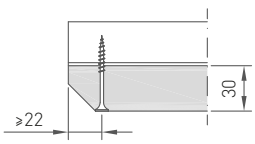

Note: Formats T1 and T2 can only be installed using direct mounting!

7.1.1 Tile fastening points when fitting to CD profiles or wooden battens

Wood screws, partial thread 4.5 x 50 mm, set at a fastening distance of 300 mm. Edge distance 22 mm for the screws in the butt joint area of the tiles.

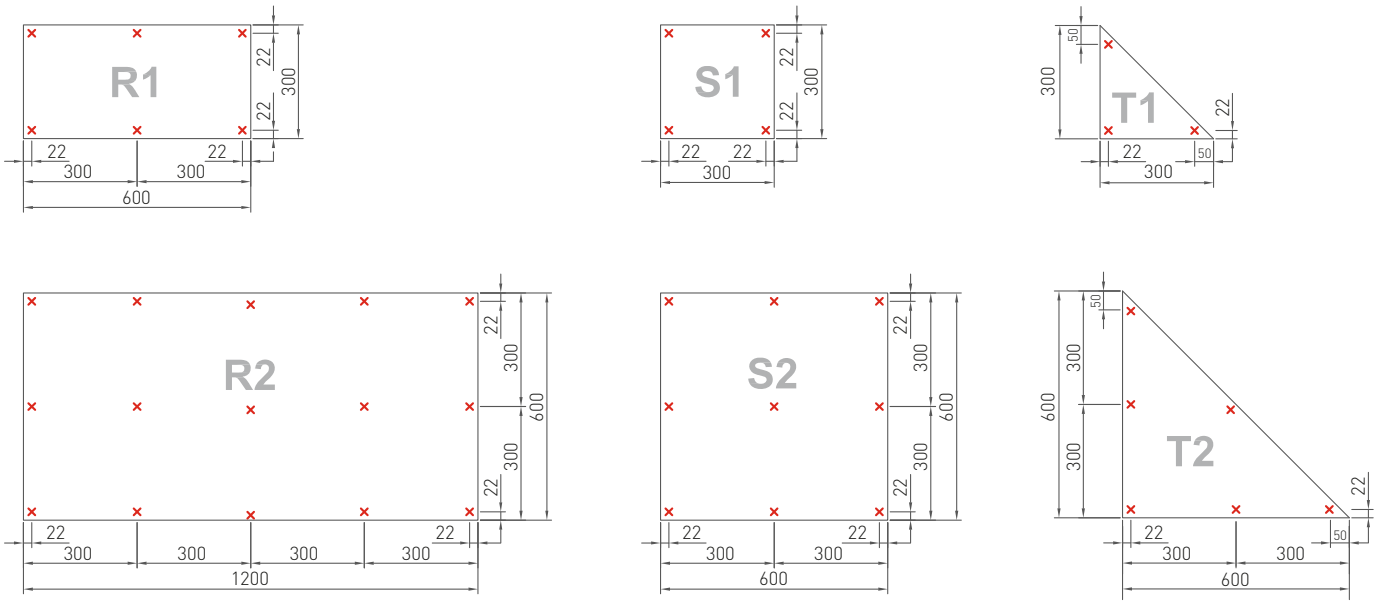

7.1.2 Material requirements per m² depending on format

	Wood screws with partial thread 4.5 x 50 mm
Natura R1	33 pieces
Natura R2	21 pieces
Natura S1	45 pieces
Natura S2	17 pieces
Natura T1	67 pieces
Natura T2	34 pieces

Note: Coloured screws 200 pieces/package on request

7.2 ADHESIVE

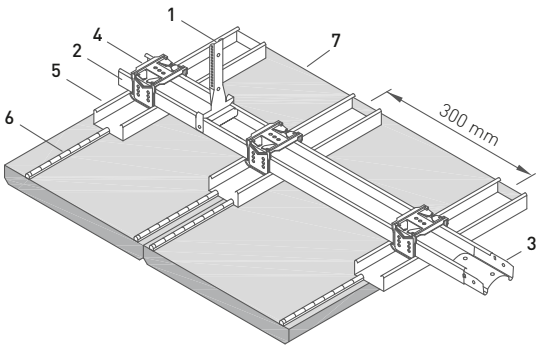

1 Nonius hanger for CD profile 60/27 according to EN 13964
2 Support grid CD profile 60/27 according to EN 14195
3 CD profile connector according to EN 13964
4 Cross connectors or equivalent according to EN 13964
5 Tile grid CD profile 60/27 according to EN 14195 or wooden battens 38 x 58 mm, spacing ⩽ 300 mm
6 Torggler Strong mounting adhesive, fastening spacing ⩽ 300 mm
7 Natura tile

Installation on CD profiles/wooden battens:
Before applying Torggler Strong adhesive, the CD profiles or wooden battens must be thoroughly cleaned of dust, dirt, and any oil films that may be present. Torggler Strong adhesive is then applied directly to the substructure in the form of a continuous bead approximately 1 cm thick (consumption: approx. 250 g/m²). The tiles are then pressed flat onto the adhesive. Due to the high initial adhesion of the adhesive, the tiles adhere immediately and do not require additional support. Slight positional adjustments are still possible at this stage, and the tiles can now be moved into their final position.

Direct installation:
Before applying Torggler Strong adhesive, both the Natura tiles and the substrate to which they are to be mounted must be completely cleaned of dust and other contaminants. The areas of application for Torggler Strong Adhesive should be checked in the manufacturer's current technical data sheet prior to use. **Bonding to wallpaper or fiberglass fleece is not permitted.** The adhesive is then applied directly to the back of the tile as a continuous bead approx. 1 cm thick (consumption: approx. 250 g/m²) at intervals of approx. 300 mm. The tiles are then pressed down over their entire surface. Thanks to the high initial adhesion of the adhesive, they stick immediately and do not require any additional support. Slight positional corrections are still possible at this stage, and the tiles can now be moved into their final position.

It is not permitted to draw guide lines on the surface with a pencil or similar. These cannot be removed after completion. The use of a laser is recommended.

During installation, the tolerances in building construction must be observed.



Torggler Strong mounting adhesive

Note: Formats T1 and T2 can only be installed using direct mounting!

7.2.1 Bonding points for the tiles

CD profiles/wooden battens:
When installing on CD profiles or wooden battens, the adhesive lines of Torggler Strong adhesive are applied directly and continuously to the load-bearing CD profiles or wooden battens. This creates linear fastening points along the sub-construction.

Direct installation:
For direct installation, the adhesive lines are applied to the back of the tiles at a thickness of approx. 1 cm and at intervals of approx. 300 mm. These parallel adhesive lines form the fastening points to the substrate.

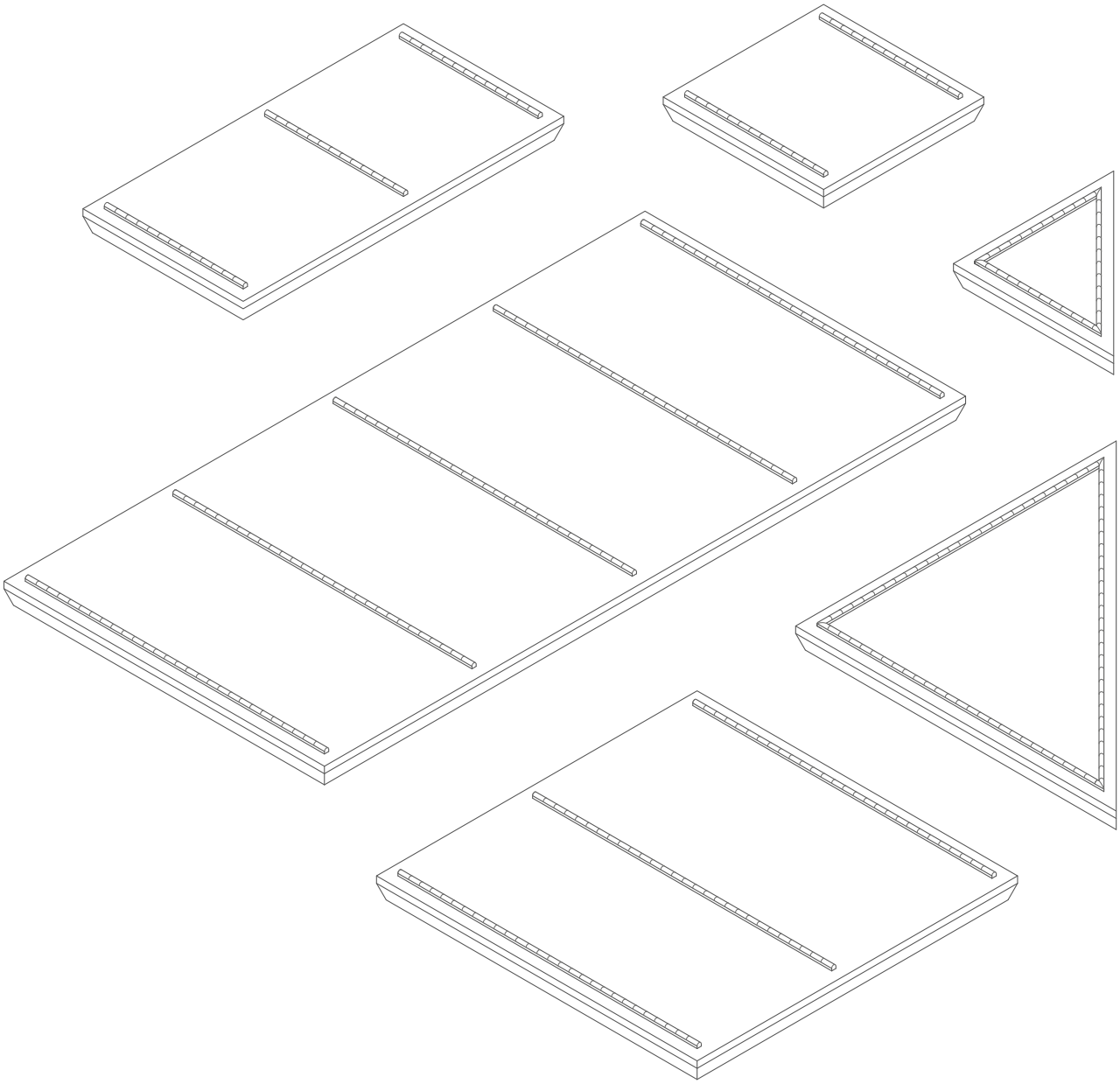

7.2.2 Material requirements per m² depending on the format

	Torggler Strong mounting adhesive, 290 ml
All formats	0.55 units

Certified Management Systems

Product warranties
The information provided in this leaflet is based on the standards and data available at the time of publication. Any performance, warranties or guarantees provided, expressed or implied, are subject to the exclusive use of OWA components and the installation of those components in accordance with our recommendations. Failure to adhere to these conditions will result in the invalidation of any performance claims, warranties or guarantees and rejection of any liability. OWA reserves the right to make any technical improvements to the products, systems or services without prior notice. **All goods and services are supplied in accordance with our current Terms and Conditions of Sale.** Subject to alterations!

The information in this brochure is up-to-date at the time of publication. Subject to alterations. The product environmental performance is documented in the product-specific environmental product declaration (EPD). Please contact our OWAconsult team for specific advice. Our experts will be happy to answer your questions using the following contact details: tel: +49 9373 201-444 or e-mail: info@OWAconsult.de

Odenwald Faserplattenwerk GmbH
Dr.-F.-A.-Freundt-Straße 3 | 63916 Amorbach | Germany
tel +49 9373 201-0 | info@owa.de
owa-ceilings.com

Brochure **9802 e**
112600